CUSTOMER CARE

! Please fill in electronically !

Repair and service document

To: Leica Camera AG / Customer Care / Am Leitz-Park 5 / D-35578 Wetzlar /Germany

Sender

Title, name

Customer No. (if known)

Phone

First name

Email

Street

City

Zip code

Country

Delivery address if different from above

Product

Serial number

Product

Serial number

Necessary accessories (e.g. chargers, SD cards) for detailed fault analysis these should be included in the shipment. Please be sure to remove any third party accessories before sending in your product. We assume no liability for third party items.

Detailed error description, further comments

Attention! Don't send in rechargeable batteries!

Fault(s) / symptoms

- decalibrated ☐
- focusing problems ☐
- electronic ☐
- pixel irregularities ☐
- impact damage ☐
- water damage ☐
- Fungus ☐

Desired service

- 6-bit coding ☐
- Upgrade ☐
- sensor cleaning ☐
- customizing ☐

Please mark the concerned part

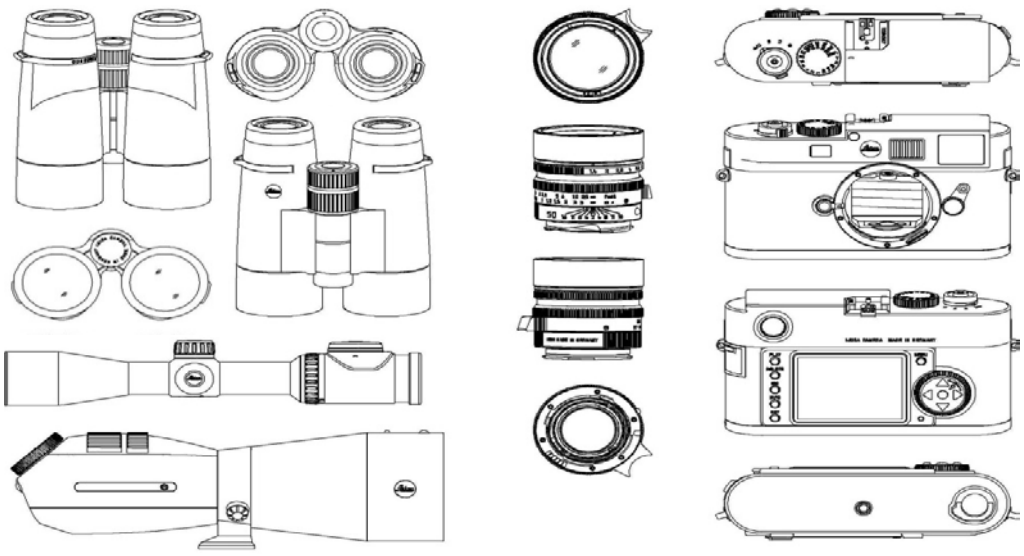

Please mark

☐ The repair should be carried out under warranty terms (WARRANTY/PASSPORT DOCUMENTS MUST BE INCLUDED).

Items not covered by Leica's worldwide limited warranty terms will be assessed by our Workshop Technicians, at Leica Customer Care, Germany, and an estimate raised for servicing/repair costs in accordance with labour/parts necassary, and communicated to you in due course. If for any reason you decide to decline an estimate, there will be a charge of 40 Euros plus VAT for return/shipping/handling.

City, date

Signature

With your signature, you confirm the accuracy of this information

Terms and Conditions of Repair of Leica Camera AG

1. SCOPE OF APPLICATION

1.1 These General Terms and Conditions of Repair ("GTC") apply to all inspection and repair services of Leica Camera AG ("LEICA") rendered by LEICA for example within the scope of an individual repair order or maintenance and servicing contracts. They do not apply to any services under guarantee and repairs within the scope of the statutory warranty for Leica products.

1.2 These GTC apply to all current and future business relations.

1.3 The applicability of any deviating or supplementary terms and conditions of the customer is excluded, unless LEICA has expressly confirmed such applicability in writing.

2. CONCLUSION OF THE CONTRACT

A contract for services within the meaning of clause 1.1 is concluded upon the customer's release of the cost estimate provided by LEICA. If the customer does not request a cost estimate, or if the services within the meaning of clause 1.1 do not exceed a value of EUR 50.00 plus value added tax, a contract will be concluded upon performance of the order.

3. REPAIRS

3.1 LEICA will perform repairs according to standardised requirements at a lump-sum price. The lump-sum price is determined to the best of our knowledge on the basis of the examination of the object to be repaired with measuring devices as usual in this line of business, and is notified to the customer in the form of a cost estimate. The services rendered for submission of the cost estimate are charged to the customer if agreed in the individual case. The cost estimate and the underlying repair prices cease to be valid if the order is released towards LEICA later than three months of the date of the cost estimate.

3.2 If during the repair works it turns out that the object cannot be successfully repaired with the standardised means and procedures taken as a basis for the cost estimate, LEICA will notify the customer accordingly by submission of a new cost estimate. If the customer requests return of the object to be repaired without change, LEICA will return the same together with an invoice for its expenses. These expenses also include the costs for the preparation of the cost estimate. If the customer requests repair, LEICA will perform such repair on the basis of the new cost estimate. The release establishes a new contract within the meaning of clause 2 of these GTC; these GTC and the Distance Marketing Information also apply to this new contract.

3.3 LEICA is entitled to use reconditioned and quality-checked components for repair, unless the customer expressly in writing insists on the use of brand-new parts.

3.4 If LEICA must use a spare part within the scope of the repair which changes the external appearance of the object to be repaired, LEICA will beforehand inform the customer thereof by a corresponding indication in the cost estimate.

4. REPAIR TIME

After conclusion of the contract, LEICA will perform the ordered repairs within four weeks. If for example due to a temporary non-availability of spare parts LEICA cannot perform the repair within the aforementioned period of time, LEICA will notify the customer accordingly, and state a new repair date.

5. PRICES

5.1 All prices are in EUR including statutory value added tax, plus the costs for packaging, shipment and insurance.

5.2 For field services, the travel costs are charged separately.

5.3 If no lump-sum fee repairs were agreed, the repair works will be charged separately by working time and spare parts.

5.4 All invoices are immediately due for payment without deduction upon collection or cash-on delivery dispatch, credit card payment or direct debit from the customer's account. Cash-on delivery dispatch within Germany is subject to a maximum amount of 5,000 Euro and will put the customer to additional expense of 2 Euro. Any deviating mode of shipment or payment requires express written agreement.

6. RISK / TRANSPORTATION INSURANCE

6.1 The risk of deterioration or loss of products in transportation is borne by the customer, insofar as the customer is an entrepreneur. Place of performance for LEICA's performance is Wetzlar. An entrepreneur is any natural or legal person or any partnership with legal capacity with whom business relations are taken up and who acts in exercising commercial or independent professional activities.

6.2 In the event of total damage or total loss of parts of the repaired products, the costs necessary for replacement of the damaged or lost parts will be reimbursed. In the case of total loss or total damage of the repaired product, the current value will be reimbursed.

7. RETENTION OF TITLE / LIEN

7.1 LEICA retains title to all parts installed by LEICA on the occasion of any repair or maintenance towards the customer, until full payment of the claims under the contract for works and services with the customer. In cases in which LEICA's title would cease to exist due to combination with other objects which LEICA does not own (e.g. the repaired object), it is already here and now agreed that the (co-)ownership of the customer to the combined object passes to LEICA at the ratio of the invoiced value of the service rendered by LEICA to the combined object at the time of combination. LEICA will retransfer the (co-)ownership to the customer at the ratio of the payments on the claims to the value of the (co-)ownership of LEICA.

7.2 In respect of claims under the contract for works and services, LEICA has a lien to the repair object of the customer of which LEICA gained possession under the contract.

8. RIGHTS OF THE CUSTOMER IN CASE OF DEFECTS, LIABILITY

8.1 For repairs carried out, LEICA assumes warranty according to the statutory regulations.

8.2 In the event of defective repair works, the customer may first claim only subsequent performance (subsequent improvement) by LEICA. Only after subsequent performance has failed, or after futile expiry of a reasonable period of time set by the customer for subsequent performance, will the customer be entitled to choose either reduction in price (reduction) or rescission of the contract (withdrawal).

8.3 Warranty claims are always excluded if the defect is attributable to improper handling of the repaired product, either by the customer, the ultimate buyer or a third party, or if the defect is based on improper or extraordinary use of the repaired product.

8.4 LEICA excludes any liability for slightly negligent breaches of duty, insofar these do not refer to damage based on injury to life, body or health, or refer to guarantees, or insofar as claims under the Product Liability Act are concerned. Likewise unaffected remains the liability for the breach of duties which are indispensable for proper performance of the contract, and on whose fulfilment the customer may regularly rely. The same applies to any breach of duty on the part of vicarious agents of LEICA.

9. FINAL PROVISIONS

9.1 Retention rights of the customer are excluded, insofar as they are not based on the same contractual relationship.

9.2 LEICA is entitled to assign its claims from deliveries and services for financing purposes.

9.3 If the customer is an entrepreneur, then the exclusive place of jurisdiction for any legal disputes arising from or in connection with this contract and the purchase contracts entered into in performance hereof shall be the registered office of LEICA. However, LEICA is entitled to also file an action with the court competent for the registered office of the customer.

9.4 These GTC and all contracts entered into in accordance with these GTC shall be governed by the laws of the Federal Republic of Germany, to the exclusion of the UN Convention on the International Sale of Goods (CISG).

9.5 If the foregoing provisions are partially ineffective or invalid, the validity of the provisions in their entirety shall remain unaffected thereby.

9.6 Changes and amendments to the contract and/or these GTC as well as side agreements require written form. The same applies to any change of the written form requirement.

Wetzlar (Germany), April 2015
Leica Camera AG

Distance Marketing Information for Consumers

1. SCOPE OF APPLICATION

This distance marketing information exclusively applies to natural persons who enter into a contract for any purpose which can mainly be attributed neither to their commercial nor to their freelance professional activities (consumer within the meaning of Section 13 German Civil Code, hereinafter referred to as "Customer") and solely for those contracts which are entered into solely by the use of means of distance communication, e.g. by letter, phone, fax or e-mail.

2. CONCLUSION OF THE CONTRACT

The information on the official internet page of Leica Camera AG (hereinafter "LEICA") at http://www.leica-camera.com does not constitute any legally binding offer. Upon ordering or commissioning, the Customer bindingly states his wish to commission the service. A contract is concluded only upon the Customer's release of the cost estimate (offer of a contract) provided by LEICA. If the customer does not request a cost estimate, or if the services do not exceed a value of EUR 50.00 plus value added tax, a contract will be concluded upon performance of the order.

In the event of any orders by electronic means, the text of the contract is electronically stored by LEICA, and the receipt of the order by electronic means is confirmed without undue delay. Together with the confirmation of receipt, LEICA will provide the Customer with the GTC, the statutory notes and the data protection notices by email. Neither the confirmation of receipt nor the taking note of an order on the telephone will constitute a binding acceptance of the offer of contract.

LEICA is entitled to accept the binding offer of the Customer within 7 working days of receipt of the order, in the event of orders placed by the Customer by electronic means within 3 working days of receipt of the order.

With regard to a legally binding order, LEICA additionally points out the notices on Data Protection.

3. CUSTOMER'S CONTRACT PARTNERS

The Customer's contract partner is the following company:

Leica Camera AG
Am Leitz-Park 5, D-35578 Wetzlar,
in each case represented by the board members
Oliver Kaltner, Ronald Marcel Peters and Markus Limberger,
Tel. +49 (0)6441-2080-189, Fax: +49 (0)6441-2080-339,
Email: customer.care@leica-camera.com,

registered with the Local Court Wetzlar, HRB 966.

According to the above mentioned contact details the LEICA Customer Care is available for any concerns or complaints of the Customer during usual business hours from Monday through Friday, from 8:00 to 17:00 each day.

4. CUSTOMER'S RIGHT OF WITHDRAWAL

Instructions on Withdrawal

Right of withdrawal

You have the right to withdraw from this contract within 14 days without giving any reason. The withdrawal period will expire after 14 days from the day of the conclusion of the contract. To exercise the right of withdrawal, you must inform us (Leica Camera AG, Am Leitz-Park 5, 35578 Wetzlar, Germany, Tel.: +49 (0)6441/2080-189, Fax: +49 (0)6441/2080-339, Email: customer.care@leica-camera.com) of your decision to withdraw from this contract by an unequivocal statement (e.g. a letter sent by post, fax or e-mail). You may use the attached model withdrawal form, but it is not obligatory.

To meet the withdrawal deadline, it is sufficient for you to send your communication concerning your exercise of the right of withdrawal before the withdrawal period has expired.

Effects of withdrawal

If you withdraw from this contract, we shall reimburse to you all payments received from you, including the costs of delivery (with the exception of the supplementary costs resulting from your choice of a type of delivery other than the least expensive type of standard delivery offered by us), without undue delay and in any event not later than 14 days from the day on which we are informed about your decision to withdraw from this contract. We will carry out such reimbursement using the same means of payment as you used for the initial transaction, unless you have expressly agreed otherwise; in any event, you will not incur any fees as a result of such reimbursement. If you requested to begin the performance of services during the withdrawal period, you shall pay us an amount which is in proportion to what has been provided until you have communicated us your withdrawal from this contract, in comparison with the full coverage of the contract.

End of Instruction on Withdrawal

5. PRICES

All prices are final prices including statutory value added tax, plus the costs for packaging, shipment and insurance.

6. SHIPMENT COSTS

In the event of withdrawal from this contract, we shall reimburse to you the costs of delivery for sending in the product to the extent they are actually incurred.

7. PROPORTIONATE COMPENSATION IN THE EVENT OF WITHDRAWAL DURING WITHDRAWAL PERIOD

If you requested to begin the performance of services during the withdrawal period, you shall pay us an amount which is in proportion to what has been provided until you have communicated us your withdrawal from this contract, in comparison with the full coverage of the contract

Wetzlar (Germany), April 2015
Leica Camera AG

Model withdrawal form

(complete and return this form only if you wish to withdraw from the contract)

To:

Leica Camera AG
Customer Care
Am Leitz-Park 5
35578 Wetzlar
Germany
Fax: +49 (0)6441 / 2080 339
Email: customer.care@leica-camera.com

I/We (*) hereby give notice that I/We (*) withdraw from my/our (*) contract of sale of the following goods (*) / for the provision of the following service (*),

_____

- Ordered on _____ (*)/received on _____ (*),
- Name of consumer(s): _____
- Address of consumer(s): _____

_____

Signature of consumer(s) (only if this form is notified on paper)

Date: _____

_____

_____
(*) Delete as appropriate.